BRITOP
FRONT END
ATTACHMENT
OF EXCAVATOR



Https://qdbritop.com
Britop@qdbritop.com

CONTENTS

BRT ATTACHMENTS

Product series and page index of this catalogue

01 COMPANY INFORMATION

Company Profile 4

Company Certifications 5

Development Process 6

Product Guide 7

02 DEMOLITION / RECYCLING EQUIPMENT

Power Shear BRTDF / BRTMC Series 8

Eagle Beak Shear BRTRT / BRTM Series 9

Pulverizer BRTP / RP / MP Series 10

Power Shear (Crushing) BRTDH / DS / MS Series 11

Hydraulic Breaker BRTB Series 12

Quick Coupler BRTR Series 13

Car Dismantling Shear BRTD / E / F / CA Series 14

03 INTELLIGENT LOADING & UNLOADING EQUIPMENT

Steel / Rock Grapple BRTA / B / AP Series 15

Mechanical Steel Grab BRTMG Series 16

Lotus Grapple Bulk Material Handling 17

Rock Bucket For CAT / PC Excavators 18

Clamshell / Tilt / Rake Bucket S/M Material Handling 19

Thumb Clamp BRTPT / CB Series 20

Demolition Sorting Bucket BRTSG Series 21

Suction Cup Electromagnetic / Hydraulic 22

04 PILE DRIVING & AUXILIARY EQUIPMENT

Plate Compactor BRTC / BRT CW Series 23

MODEL CODE LEGEND

suffix meaning of each model code

DH	Dual-cylinder power shear / Doosan	CW	Compaction wheel	C	Plate compactor
ML	Electromagnetic suction cup	SG	Demolition sorting bucket	CB	Bucket clamp
PT	Thumb clamp	EC	Volvo fitment	CAT	Caterpillar fitment

BRITOP MACHINERY

COMPANY founded in 2009, covers an area of 56,800 square meters, has over 300 employees including 40 highly qualified engineers and hundreds of well-trained workers.

BRITOP specialize on R&D, production, sales of recycling equipment, demolition attachments and intelligent equipment for excavator. The recycling equipment mainly includes scrap shear, power shear, car-dismantling shear, magnet, orange peel grapple; the demolition attachments include hydraulic hammer, crusher, pulverizer, pile hammer, sorting grapple, plate compactor, rock bucket, quick hitch, ripper, etc.

BRITOP will strive to lead the development of attachments, especially in the demolition and recycling industries. We will achieve to be world-class excavator hydraulic attachment manufacturer. We firmly believe that quality is the life of an enterprise, and **BRITOP** will always hold this to serve customer with heart.



COMPANY CERTIFICATIONS



COMPANY EQUIPMENT



COMPANY SERVICES

Guided by the principle of customer first and quality foremost, the BRT after-sales service team follows the 10-30-8-24 service standard: responding within 10 minutes of receiving a customer request, providing a solution within 30 minutes, shipping claim products within 8 hours, and reaching the site within 24 hours for complex cases, with timely consulting, parts and dispatch.

10 MIN	Response within 10 min of request	30 MIN	Solution provided within 30 min
8 HRS	Claim products shipped in 8 hrs	24 HRS	Engineers on site within 24 hrs

GUIDE FUCTION

Britop 博越达

SHATTERED/REMOVED ENGINEERING EQUIPMENT

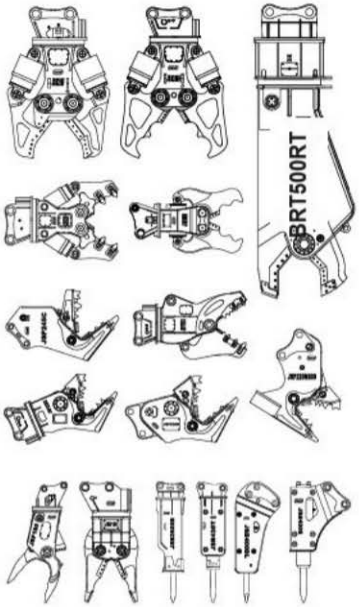

Powerful Shear / Crusher
Twin cylinders with synchronizing mechanism: shearing of steel structures and scrap metal, crushing of reinforced concrete.

Multi Crusher
For shearing steel structures and scrap metal, and crushing reinforced concrete.

Eagle Shear
Imported blades, sturdy and durable; for dismantling H-beams, I-beams, main girders and ship hulls.

Hydraulic Pulverizer
For demolition work and industrial waste; outstanding in safety, environmental protection and cost saving.

Concrete Crusher
Dismantling of chemical plants, steel mills and steel-structure workshops; also recovers concrete material.

Hydraulic Breaker
Used in metallurgy, mining, railway, highway and construction for breaking, crushing and demolition.

Hydraulic Shear (Car Dismantling)
Shearing and dismantling of all kinds of scrap vehicles, especially one-pass shearing of H-beam structures.

Excavator Clamp Arm
Works with the car dismantling shear as an auxiliary pressing arm for fast, precise dismantling.

INTELLIGENT LOADING AND UNLOADING EQUIPMENT

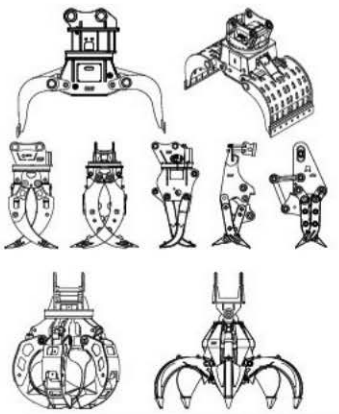

Sorting Grab
Loading and unloading of goods and materials at steel plants, recycling yards, ports and freight yards.

Excavator Magnet Lifter
Hydraulic generator driven; for sorting, loading, handling and tidying of ferrous scrap.

Steel / Rock / Log Grab (Dual Cyl.)
Loading and unloading for steel plants, smelters, ports, docks, forestry and timber yards.

Mechanical Grapple
Driven by the excavator's own hydraulic system, no piping needed; economical and cost-effective.

Steel / Rock Grab (Single Cyl.)
Single-cylinder design for easier grabbing.

INTELLIGENT LOADING AND UNLOADING EQUIPMENT

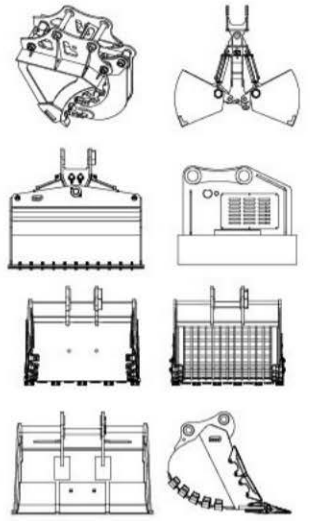

Orange Peel Grapple
Handles large volumes of bulk material; loading and unloading for railway, port, timber and construction work.

Clamp Bucket
Site preparation, ground cleaning, gravel yard digging and clearing, forestry and residential demolition.

Tilt Bucket
Trimming of slopes and flat ground, plus high-capacity dredging and cleaning of rivers and ditches.

Clamshell Bucket
Digging and loading of granular material in trenches or confined spaces.

Excavator Bucket
High-strength wear-resistant steel plate; customizable.

Skeleton Bucket
High-strength wear-resistant steel plate; customizable.

Excavator Mud Bucket
High-strength wear-resistant steel plate; customizable.

COMPACTION PILING AND AUXILIARY EQUIPMENT

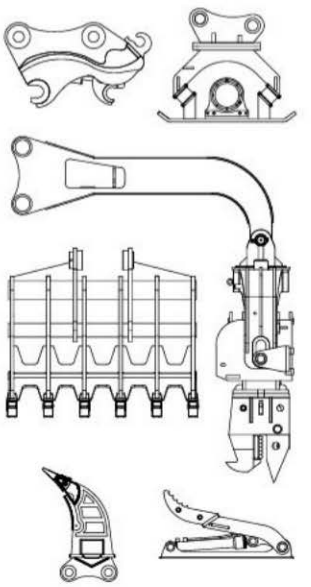

Hydraulic Power Thumb
For places where material may tip while loading, especially high-lift loading.

Excavator Rake
Handling of brush, logs, stone and waste in various engineering work.

Ripper
Crushing and splitting of cracked rock, frozen soil, asphalt pavement, hard soil, moderately hard stone and weathered rock.

Hydraulic Quick Hitch
Fast mounting and switching of attachments on the excavator; saves time and raises efficiency.

Quick Hitch (Double Lock Type)
Further enhanced safety.

Hydraulic Plate Compactor
Compaction of abutment backs, culvert sides, shoulders, slopes, highway and railway subgrades, dams and revetments.

Pile Hammer
Pile driving and hole forming in high-rise buildings, overpasses, seaports, railways and highways.

MODEL CODE LEGEND

DH=Double-cylinder Shear (crusher type)	CW=Heavy-duty Plate Compactor	C=Plate Compactor	ML=Electromagnetic Magnet	SG=Demolition Sorting Grab
CB=Clamp Bucket	PT=Power Thumb	EC=For Volvo excavators	CAT=For Caterpillar excavators	

Https://qdbritop.com

Twin-Cylinder Power Shear

Application:

Cutting of steel frames and truck chassis; dismantling of scrap vehicles and scrap metal products.

Features:

Imported high-strength wear-resistant steel: tough and durable;

Twin cylinders with synchronizing mechanism; cylinder guards prevent scratches; strong shear force combined with high efficiency;

Swiss-imported plunger motor with 360 deg rotation gives stable performance for best positioning and precise control;

Honed cylinder tube and imported NOK seals: short opening/closing cycle and long service life;

Wear-resistant alloy steel blades resist high temperature and deformation; blade guide design prevents slipping and jamming;

Differential acceleration valve raises no-load travel speed by nearly 50%;

Segmented connecting body keeps later repair and maintenance cost low;

Lightweight body design: low weight and low fuel consumption.



Shear Type



Multi-Function

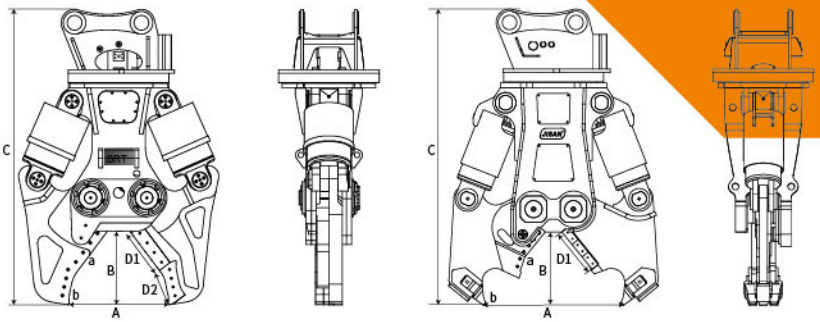

Item / Model	Unit	BRTDF40M	BRTDF80	BRTDF220	BRTDF290-III	BRTDF310	BRTDF400	BRTDF450	BRTDF500	BRTMC280
		Shear Type								Multi-Function
Excavator	ton	3-5	6-9	12-18	20-30	25-35	30-40	35-45	45 min	20-30
Weight	kg	360	750	1600	2850	3050	4050	4450	5500	2400
Working Pressure	bar	200	250	300	320	320	320	320	320	320
Working Flow	L/min	60	150	250	280	280	350	350	350	280
Opening A	mm	335	435	600	690	740	790	800	870	1020
Cutting Depth B	mm	280	330	460	500	550	620	650	730	550
Length C	mm	1160	1420	1899	2210	2345	2590	2700	2850	2225
Blade Length D1/D2	mm	180+130	210+155	300+210	300+260	350+260	350+330	350+360	380+400	360
Shear Force a	ton	37	62	108	150	156	250	260	280	185
Shear (Crush) Force b	ton	24	43	75	100	118	150	160	160	76
Slew Diameter	mm	-	360	593	752	752	806	806	806	752

Note: M = Mechanical Slewing

Britop 博越达

Eagle Beak Shear

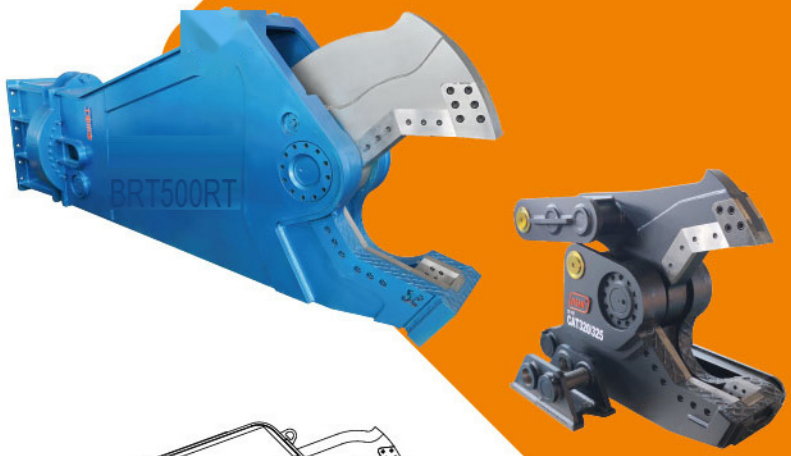

Application:

Dismantling of large steel structures: H-beams, I-beams, girders, support beams, vehicles and vessels.

Features:

Imported high-strength wear-resistant steel: tough and durable;

Pins forged in one piece from alloy steel: high strength and toughness;

Swiss-imported rotary piston motor: high torque, fast rotation; built-in mechanical brake for high safety;

High-strength cylinder with honed tube and imported NOK seals for long life; inverted cylinder design better protects the rod;

Blade blocks in wear-resistant alloy steel: heat and deformation resistant, tough and durable; adjustable blade clearance clears jammed material quickly;

Differential speed-up valve raises no-load stroke speed by nearly 50%;

Wear-resistant copper block improves blade stability, keeping the jaw precisely aligned to avoid material jams.

Arm-mounted and boom-mounted control options available.

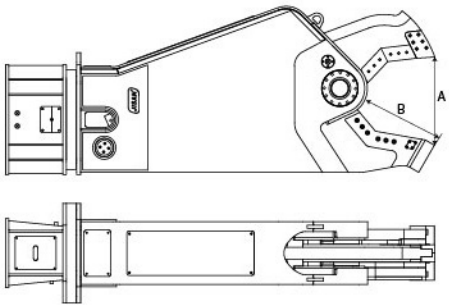

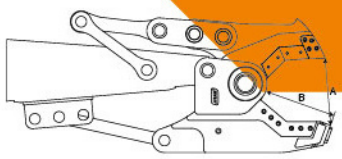

		Hydraulic									Mechanical		
Item / Model	Unit	BRT40RT	BRT80RT	BRT150RT	BRT280RT	BRT380RT	BRT400RT	BRT450RT	BRT500RT	BRT800RT	BRTM150	BRTM280	BRTM380
Arm Mounting	ton	3-5	6-9	12-18	20-28	30-38	36-45	40-50	46-60	60-80	12-18	20-28	30-38
Boom Mounting	ton	-	-	-	-	20-38	26-45	30-50	36-60	50-80	-	-	-
Working Pressure	bar	200	200	250-300	280-320	300-320	320-350	320-350	320-350	320-350	250-300	250-300	300-320
Working Flow	lpm	80	100	150	180-220	200-250	200-250	250-300	250-300	300-360	90-110	180-220	200-250
Weight	kg	420	580	1350	2450	3800/4200	5600/5900	6100/6500	6500/6800	8500/8800	750	1250	1650
Slew Flow	lpm	20	30	30-40	30-40	30-40	30-40	30-40	30-40	50-60	-	-	-
Slew Pressure	bar	100	100	90-100	100-115	100-115	100-115	100-115	100-115	140-150	-	-	-
Opening A	mm	200	302	389	500	600	663	702	816	922	380	480	600
Cutting Depth B	mm	200	311	417	530	630	680	729	800	900	400	525	630
Overall Length	mm	1450	1790	2100	3030	3450/4600	4400/5100	4550/5250	4600/5300	5000/5700	980	1400	1700
Slew Diameter	mm	360	360	593	752	806	922	922	922	1022	-	-	-

Britop 博越达

Concrete Pulverizer

Application:

Separating reinforced concrete and similar demolition work.

Features:

Partly made of imported high-strength wear-resistant steel: light and wear resistant;

Pins in 42CrMo alloy steel: high strength and toughness;

Rotary pulverizer uses a Swiss-imported rotary motor for more flexible rotation;

Upper and lower wear plates are replaceable as a whole for easy maintenance and lower cost;

Unique jaw design allows quick material release;

Inverted-cylinder and pivot-pin cylinder systems are both available;

Optional differential speed-up valve raises no-load stroke speed by nearly 50%;

Optional DC magnetic suction cup needs no excavator modification, enabling pulverizing, loading and other multi-function work.



Rotary HD Pulverizer



Suction-Cup Pulv.



Inverted-Cyl. Pulv.



Pivot-Pin Pulv.

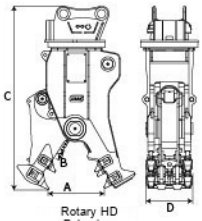

Rotary HD Pulverizer

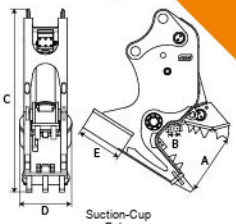

Suction-Cup Pulv.

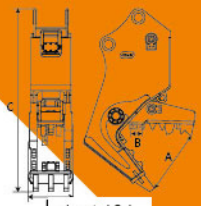

Inverted-Cyl. Pulv.

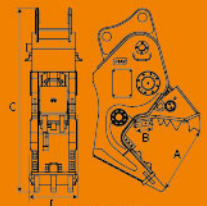

Pivot-Pin Pulv.



Rotary Pulverizer



Heavy-Duty Pulv.



Mechanical Pulv.

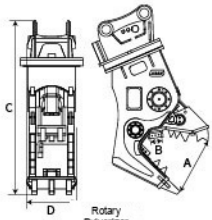

Rotary Pulverizer

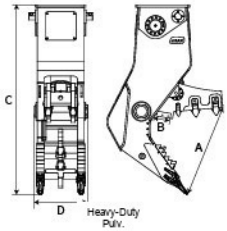

Heavy-Duty Pulv.

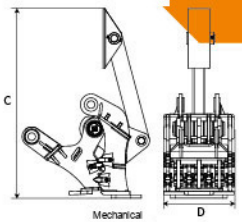

Mechanical Pulv.

		Rotary HD Pulverizer				Suction-Cup Pulv.		Inverted-Cyl. Pulv.			Pivot-Pin Pulv.		Rotary Pulverizer		Heavy-Duty Pulv.	Mechanical Pulv.	
Item / Model	Unit	BRTRP80	BRTRP180	BRTRP220	BRTRP280	BRTP220-IIM600	BRTP230-IIM600	BRTP80C	BRTP230-IIC	BRTP245C	BRTP150D	BRTP230D	BRTP150X	BRTP220X	BRTHP280	IBRTMP200	BRTMP300
Excavator	ton	5-10	12-18	20-30	25-40	20-24	26-30	6-9	26-30	26-32	9-16	20-30	12-18	20-30	20-35	20-28	30-38
Weight	kg	670	1300	2250	2660	2000	2330	480	1750	2050	1000	1700	1200	1750	2050	1200	1500
Opening A	mm	510	610	750	880	800	830	500	830	1000	700	810	570	700	975	400	430
Blade Length B	mm	140	140	180	260	180	170	130	170	230	130	230	130	180	200	-	-
Length C	mm	1645	2050	2406	2584	2275	1891	1525	1891	2600	1829	2267	2000	2321	2322	1970	2110
Bite Width D	mm	395	440	613	618	600	600	450	525	610	510	590	650	752	590	730	825
Crushing Force	ton	43	80	120	150	80	82	40	82	110	65	95	65	80	150	-	-
Working Pressure	bar	280	280	320	320	300	300	200	300	320	250	320	250	320	320	-	-
Working Flow	lpm	100	150	200	250	200	200	100	200	200	150	200	150	200	200	-	-
Suction Cup Dia. E	mm	-	-	-	-	600	600	-	-	-	-	-	-	-	-	-	-
Rotary Motor Press.	lpm	120	120	120	120	-	-	-	-	-	-	-	90	120	-	-	-
Rotary Motor Flow	mm	40-60	40-60	40-60	40-60	-	-	-	-	-	-	-	30-50	40-60	-	-	-

Britop 博越达

Twin-Cylinder Power Shear (Crushing)

Application:

Concrete crushing and rebar dismantling.

Features:

Twin-cylinder design: powerful shear force with high efficiency;

Swiss-imported motor with full-angle rotation: stable performance for optimal positioning and precise control;

Honed cylinder tube and imported NOK seals: short open/close cycle and long life;

Blade blocks in wear-resistant alloy steel: heat and deformation resistant, tough and more durable.

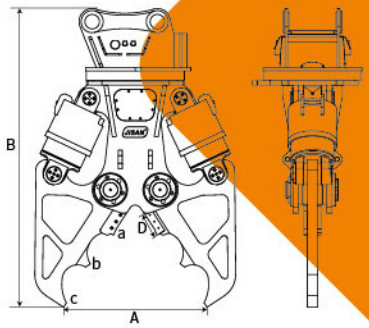



Item / Model	Unit	BRTDH80	BRTDH80M	BRTDH220	BRTDH220M	BRTDH260	BRTDH260M	BRTDH290	BRTDH290M	BRTDH380M
Excavator	ton	6-9	6-9	12-18	12-18	20-30	20-30	25-35	25-35	30-45
Weight	kg	560	510	1300	1280	2190	2100	2350	2250	3940
Working Pressure	bar	240	240	300	300	320	320	320	320	320
Working Flow	L/min	150	150	250	250	280	280	280	280	350
Opening A	mm	630	630	900	900	1100	1100	1100	1100	1550
Length B	mm	1466	1363	1959	1904	2289	2269	2289	2269	2900
Blade Length D	mm	135	135	180	180	200	200	200	200	240
Shear Force a	ton	120	120	190	190	240	240	240	240	350
Crush Force b/c	ton	67/43	67/43	112/72	112/72	146/98	146/98	161/108	161/108	211/138
Slew Diameter	mm	360	360	593	593	752	752	752	752	806

Note: M = Mechanical Slewing

Demolition Shear



Demolition Shear

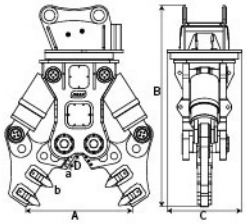



Single-Cyl. Shear

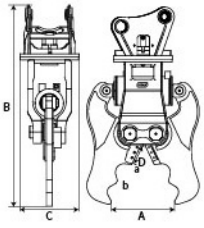

Item / Model	Unit	Demolition Shear JSDS80	BRTDS80M	BRTDS150	BRTDS150M	BRTDS200	BRTDS200M	BRTDS300	BRTDS300M	Single-Cyl. Shear BRTMS20M	BRTMS40M	BRTMS80M	BRTMS260	BRTMS260M
Excavator	ton	6-9	6-9	12-18	12-18	20-28	20-28	30-38	30-38	1.5-2.5	3-5	6-9	20-30	20-30
Weight	kg	360	300	1000	950	1750	1700	2320	2250	135	220	380	2450	2400
Working Pressure	bar	250	250	280	280	300	300	300	300	180	200	260	320	320
Working Flow	lpm	120	120	200	200	250	250	250	250	30	40	100	350	350
Opening A	mm	390	390	570	570	820	820	900	900	290	350	420	1000	1000
Blade Length D	mm	100	100	150	150	180	180	180	180	100	100	120	160	160
Height B	mm	1280	1280	1756	1756	1980	1980	2120	2120	1000	1148	1382	2550	2550
Width C	mm	850	850	1146	1146	1400	1400	1500	1500	660	785	895	1510	1510
Crush Force b	ton	20	20	80	80	100	100	120	120	20	22.5	50	132	132
Shear Force a	ton	50	50	165	165	210	210	260	260	-	-	-	-	-
Slew Diameter	mm	360	360	593	593	752	752	752	752	-	-	-	752	752

Note: M = Mechanical Slewing

Hydraulic Breaker

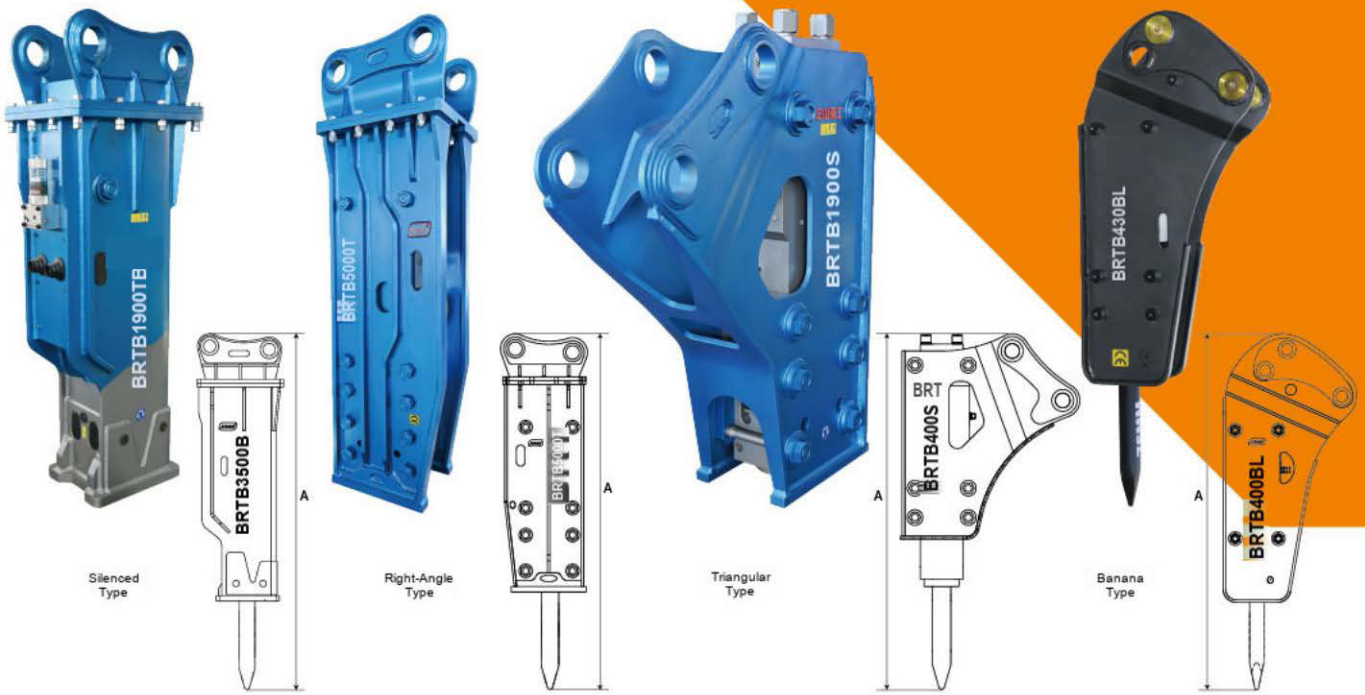

Item / Model	Unit	BRTB100	BRTB200	BRTB300	BRTB400	BRTB600	BRTB800	BRTB900	BRTB1600	BRTB1900	BRTB3500	BRTB4500	BRTB5000	BRTB6000	BRTB6500
Silenced Weight	kg	102	126	168	361	448	723	1003	1889	2009	2935	3537	4398	5526	7304
Right-Angle Weight	kg	72	95	157	331	398	626	856	1789	2025	2738	3145	4025	5372	7015
Triangular Weight	kg	70	93	155	263	334	553	759	1607	1772	2575	2745	3704	4831	6029
Banana Weight	kg	-	-	-	313	390	-	-	-	-	-	-	-	-	-
Sil. / Right-Angle A	mm	1154	1246	1417	1637	1777	2100	2285	2814	2832	3265	3444	3812	4172	4321
Tri. / Banana A	mm	953	1071	1177	1351/1689	1541/1783	1735	1978	2377	2424	2773	2981	3219	3437	3546
Pressure	bar	90-120	90-120	90-120	110-140	120-150	130-160	150-170	160-180	160-180	200-220	210-230	230-250	260-280	280-300
Flow	lpm	15-30	20-40	25-50	40-70	50-90	60-100	80-110	120-150	120-180	180-240	200-260	220-270	240-280	280-320
Frequency	bmp	800-1400	700-1200	600-1100	500-900	400-800	400-800	350-700	350-500	350-500	200-300	150-300	140-200	120-140	110-130
Hose Dia.	inch	1/2	1/2	1/2	1/2	1/2	3/4	3/4	1	1	1¼	1¼	1¼	1¼	1¼
Chisel Dia.	mm	40	45	53	68/70	75	85	100	135	140	155	165	175	195	205
Tonnage	ton	0.5-1.2	0.8-1.5	1.5-3.5	4-7	6-9	7-14	10-15	18-24	20-24	27-33	33-38	40-45	45-55	55-65

Britop 博越达

Quick Coupler


P Type


H Type


Double-Lock DL Type


Tilting T Type


Tilting DT Type


Tilting Double-lock DLT Type

Application:

Excavators of all types and brands.

Features:

Q355B manganese plate steel gives high strength and corrosion resistance; pins are made of 42CrMo alloy steel with built-in oil passages for high strength and toughness; quick mounting and switching between attachments saves time and improves efficiency.

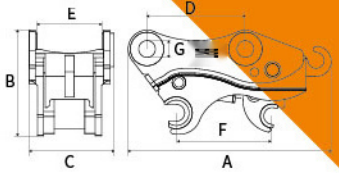

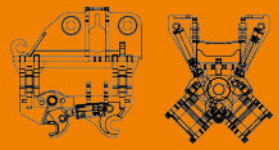

Item / Model	Unit	LJQJX00P	LJQ00P	LJQJX01P	LJQ01P	LJQJX02P	LJQ02P	LJQJX04P	LJQ04P	LJQJX06P	LJQ06P	LJQ08P	LJQ09P	LJQ10P	LJQ14P	LJQ17P	LJQ20P
Excavator	ton	1.5-2.5	1.5-2.5	2.5-3.5	2.5-3.5	4-5	4-5	5-8	5-8	9-19	9-19	17-23	23-30	30-35	34-40	40-49	50-60
Weight	kg	27-30	27-30	36-42	36-42	55-60	55-60	80-92	80-92	180-190	180-190	300-325	410-430	510-570	550-600	720-780	1000-1100
Length A	mm	400-430	400-430	430-460	430-460	540-550	540-550	585-620	585-620	790-820	790-820	970-1000	1010-1030	1100-1200	1100-1200	1200-1300	1300-1450
Height B	mm	250-280	250-280	270-300	270-300	300-310	300-310	340-350	340-350	410-420	410-420	500-520	590-620	630-640	630-640	630-650	800-850
Width C	mm	220-250	220-250	230-290	230-290	290-325	290-325	380-405	380-405	375-420	375-420	470-510	520-570	530-570	550-610	620-660	670-800
Center Dist. D	mm	90-130	90-130	150-200	150-200	220-305	220-305	260-350	260-350	350-420	350-420	420-500	470-520	490-580	490-580	535-665	570-670
Stick Opening E	mm	95-135	95-135	105-145	105-145	145-185	145-185	175-230	175-230	220-280	220-280	305-360	325-410	345-410	410-480	410-480	420-510
Cylinder Stroke	mm	90-135	90-135	150-200	150-200	220-305	220-305	260-350	260-350	350-420	350-420	420-500	470-520	490-580	490-580	535-665	570-670
Shaft Spacing F	mm	165-170	165-170	170-180	170-180	200-210	200-210	230-240	230-240	250-260	250-260	305-315	385-395	390-420	390-420	400-440	510-550
Shaft Dia. G	mm	25-30	25-30	30-40	30-40	40-50	40-50	45-55	45-55	60-65	60-65	70-80	80-90	90-100	100-110	110-120	120-130
Pressure	bar	-	30-40	-	30-40	-	30-40	-	30-40	-	30-40	30-40	30-40	30-40	30-40	30-40	30-40
Oil Flow	lpm	-	10-20	-	10-20	-	10-20	-	10-20	-	10-20	10-20	10-20	10-20	10-20	10-20	10-20

Note: P - P-type coupler; H - H-type coupler; M - Mechanical type; DL - Double-lock type; T - Single-cylinder tilting type; DT - Dual-cylinder tilting type; DLT - Tilting double-lock type

Ripper

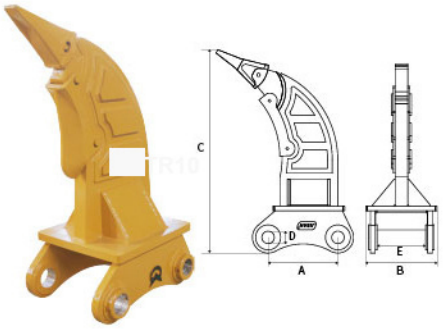

Item / Model	BRTR02	BRTR04	BRTR06	BRTR08	BRTR08-DT	BRTR08-DH	BRTR10	BRTR10-DT	BRTR14	BRTR17	BRTR20	BRTR24
Excavator ton	3-5	6-9	9-16	18-26	18-26	18-26	26-35	26-35	30-40	40-50	50-65	65-90
Center Dist. A mm	265	300	390	465	465	465	520	520	570	570	600	670
Overall Width B mm	410	500	680	870	658	930	950	720	1115	1166	1227	1356
Overall Height C mm	690	900	1200	1300	1500	1220	1415	1660	1495	1665	1788	1989
Shaft Dia. D mm	40-50	50-55	60-70	70-80	70-80	70-90	80-90	80-100	80-90	90-110	110-130	110-120
Opening E mm	120-180	160-240	220-280	300-410	310-400	310-400	320-450	400-420	340-480	345-480	430-550	450-600
Main Plate Thk mm	50	50	60	80	80	65	80	90	90	90	100	100
Tooth Model type	DH55	DH150	DH220	D85C	DH300	DH420	D85C	DH300	4T5502	4T5502	D11	D11
Weight kg	65	125	260	426	440	480	575	660	730	850	1320	1810

Note: DT - Double-tooth type; DH - Double-head type

Britop 博越达

Car Dismantling Shear

Application:

Dismantling of small cars, buses, light trucks, cab fronts and car body shells.

Features:

Wear-resistant steel keeps the structure light and durable; a high-speed rotary motor gives 360-degree flexible rotation that is light and responsive; imported HALLITE seals mean a short working cycle and long service life; a large jaw opening allows the whole engine to be gripped; precise dismantling down to small parts such as wiring harnesses and switches.



Smart Dismantling Shear



New-type Dismantling Shear



Reinforced Dismantling Shear

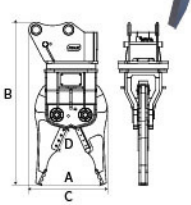

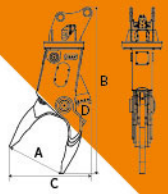

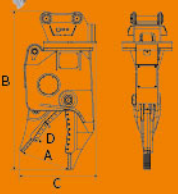

		Smart Dismantling Shear	New-type Dismantling Shear		Reinforced Dismantling Shear
Item / Model	Unit	BRTD200	BRTF80	BRTF180	BRTE260
Excavator	ton	12-25	6-12	15-24	20-30
Weight	kg	940	600	1200	1600
Max. Opening A	mm	750	680	850	720
Overall Length B	mm	1964	1940	2490	2390
Overall Width C	mm	983	975	1215	1050
Blade Length D	mm	280	180	220	600
Max. Cutting Force	ton	115	54	107	230
Pressure	bar	280	180	280	320
Oil Flow	lpm	180	120	180	200
Swing Diameter	mm	593	360	593	752

Car Pressing Frame



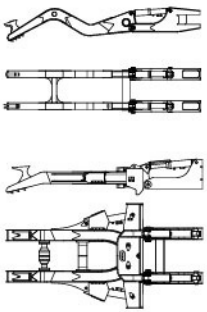

		Single-acting Arm		Double-acting Arm		
Item / Model	Unit	BRTCA15S	BRT0S	BRT5D	BRTCA20D	BRTCA20DL
Excavator	ton	9-16	17-25	9-16	17-25	17-25
Weight	kg	2100	2800	2800	3200	3200
Max. Opening	mm	-	-	2800	3600	3600
Height	mm	2000	3000	2200	2600	2600
Pressure	bar	250	280	250	280	280
Oil Flow	lpm	120	120	220	220	220
Open Cycle	sec	2.6	2.8	2.1	2.9	2.9
Close Cycle	sec	2.4	2.6	2.3	2.7	2.7

Note: S - Single-acting arm; D - Double-acting arm; L - Widened base

Britop 博越达

Steel / Rock Grapple (Single-cylinder)

Application:

Loading and unloading in steel mills, smelters, ports, docks, forestry and log yards.

Features:
Q355 alloy manganese plate steel gives high strength and light weight; a high-torque imported hydraulic motor with a brake function provides more flexible gripping; honed cylinder tubes and imported HALLITE seals give a short working cycle and long service life; cylinders have built-in lock valves that prevent the grab or the load from dropping, making operation safer; the connecting body uses a lock-nut structure that stays tight and will not deform.

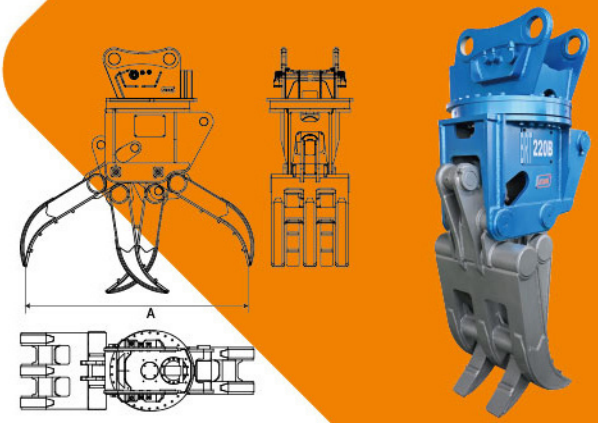

Item / Model	Unit	BRTB	BRT150B	BRT220B
Excavator	ton	6-9	9-16	18-26
Weight	kg	520	1000	1750
Opening A	mm	1650	1800	2100
Pressure	bar	180	220	260
Oil Flow	lpm	100	160	200-250
Swing Diameter	mm	360	593	752

Steel / Rock / Wood Grapple (Dual-cylinder)

Application:
Loading and unloading in steel mills, smelters, ports, docks, forestry and log yards.

Features:
Alloy manganese plate steel offers strong wear resistance; a high-torque hydraulic motor runs fast and has a brake function for more flexible gripping; the opening is larger than comparable models, giving bigger loads and long service life; cylinders have built-in lock valves that prevent the grab or the load from dropping, making operation safer.

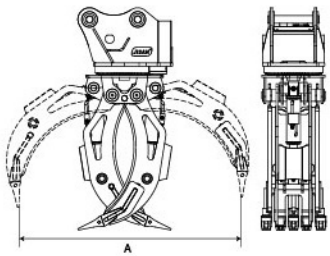



Item / Model	Unit	BRTRT	BRT60A	BRTP	BRT150A	BRT50AP	BRT220A	BRT20AP	BRT00A
Excavator	ton	4-5	6-9	6-9	9-16	12-18	18-26	20-28	28-35
Weight	kg	320	435	510	950	1200	1800	2300	2130
Opening A	mm	1060	1400	1400	1600	1600	2100	2100	2500
Pressure	bar	110-140	200-240	200-240	220-260	220-260	240-280	240-280	260-300
Oil Flow	lpm	30-55	100	100	160	160	200-250	200-250	220-280
Swing Diameter	mm	360	360	360	593	593	752	752	752

Note: P - 3+4 jaw grab

Mechanical Steel Grapple

Application: Clamping work at scrap recycling yards, steel smelting plants and construction demolition sites.

Features:

The main body is made of high-quality NM400 wear-resistant steel with excellent wear resistance; friction and impact resistance are improved for long service life; the lightweight design reduces the working load on the excavator and makes operation more flexible, raising working speed; pins are made of 42CrMo alloy steel with high strength and good toughness, able to withstand high-frequency impact and heavy loads; dedicated oil passages inside the pins allow precise lubrication, reducing part wear and maintenance cost and ensuring long-term stable operation.



Type A



Type C

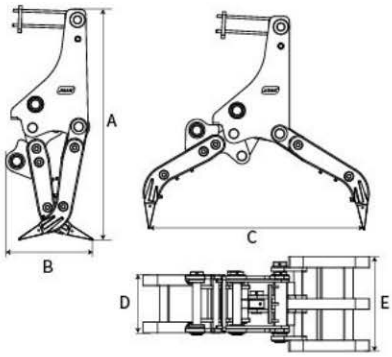

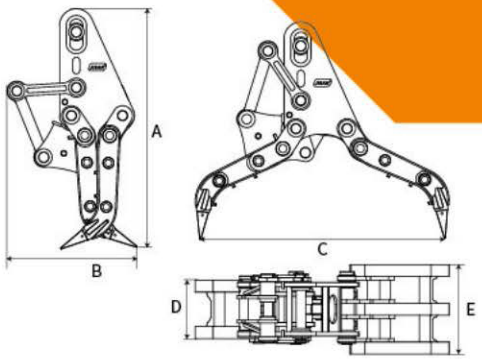

	Unit	BRTMG04A	BRTMG06A	BRTMG08A	BRTMG08AP	BRTMG10A	BRTMG06C	BRTMG08C	BRTMG10C
Excavator	ton	6-9	9-16	18-24	18-24	26-35	9-16	18-24	26-35
Weight	kg	355	550	1010	1330	1100	690	1300	1450
Height A	mm	1563	1700	2150	2150	2160	1500	1992	2066
Width B	mm	541	711	760	1060	880	610	750	840
Opening C	mm	1500	1700	2000	2000	2000	1600	2050	2160
2-tooth Width D	mm	316	360	460	-	540	400	490	580
3-tooth Width E	mm	556	630	760	740	880	610	750	840
4-tooth Width	mm	-	-	-	1060	-	-	-	-

Note: P - 3+4 jaw grab

Britop 博越达

Lotus Grab

Application:
Loading, unloading and handling of bulk stone, steel and scrap materials.

Features:
NM400 steel makes the grab light and wear resistant; pins are heat-treated 42CrMo alloy steel with high strength and good toughness; all tines are made of wear-resistant plate for longer jaw service life; a Swiss-made rotary motor delivers higher torque and more flexible gripping; the slewing system uses a piston motor with a stable braking function; fully enclosed jaws effectively protect the cylinder; cylinders are fitted with spherical plain bearings to eliminate radial force and reduce failure rate.



Lotus Grab A


Lotus Grab B

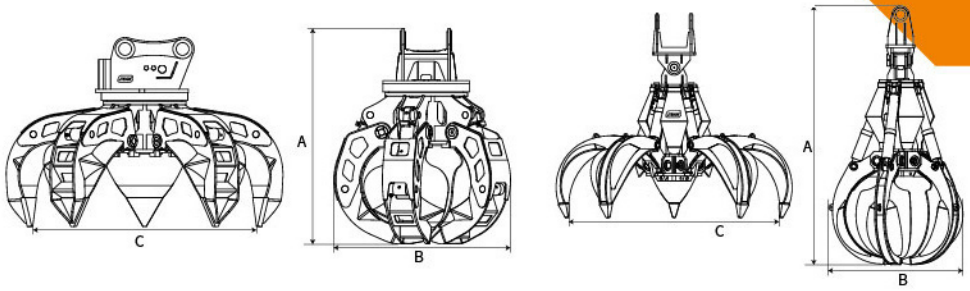

Item / Model	Unit	BRT0G60AF-4T	BRT0G80MF-5T	BRT0G80AS-4T	BRT0G80MS-5T	BRT0G150AR-4T	BRT0G150MR-5T	BRT0G150MF-4T	BRT0G150MF-5T	BRT0G150MS-4T	BRT0G150MS-5T	BRT0G200MR-4T	BRT0G200MR-5T	BRT0G200MF-4T	BRT0G200MF-5T	BRT0G200MS-4T	BRT0G200MS-5T	BRT0G1518S5T	BRT0G2008S-5T	BRT0G3008S-5T
Excavator	ton	6-9	6-9	6-9	6-9	9-16	9-16	9-16	9-16	9-16	9-16	18-30	18-30	18-30	18-30	18-30	18-30	9-16	18-26	20-35
Weight	kg	355	420	385	450	900	1000	820	920	850	950	1850	2100	1500	1750	1600	1850	1000	1500	1950
Height A	mm	1127	1127	1486	1486	1648	1648	1550	1550	1800	1800	1870	1870	1850	1850	2220	2220	2250	2680	3050
Width B	mm	1000	1000	1000	1000	1260	1260	1260	1260	1260	1260	1605	1534	1605	1534	1605	1534	1180	1352	1590
Opening C	mm	1200	1200	1200	1200	1600	1600	1600	1600	1600	1600	2050	2050	2050	2050	2050	2050	1800	2200	2600
Pressure	bar	220	220	220	220	250	250	250	250	250	250	280	280	280	280	280	280	250	280	300
Oil Flow	lpm	100	100	100	100	160	160	160	160	160	160	220	220	220	220	220	220	160	220	240
Capacity	m^3	0.3	0.3	0.3	0.3	0.6	0.6	0.6	0.6	0.6	0.6	0.8	0.8	0.8	0.8	0.8	0.8	0.6	1	1.2
Swing Diameter	mm	-	-	-	-	593	593	-	-	-	-	752	752	-	-	-	-	-	-	-

Note: A - Heavy-duty type; B - Liebherr type; R - Rotary type; F - Fixed type; S - Swing type; 4T - 4 tines; 5T - 5 tines

Britop 博越达

Rock Bucket



Application: Hard rocks, weathered rock, solid stone and ore.

Features:
High strength, good wear resistance and long anti-corrosion life; welded firmly and solidly; thickened design with side and wear plates; the main body uses Q355B manganese plate steel, NM wear-resistant plate and imported high-strength steel; the main pin uses 42CrMo alloy steel for high strength and good toughness; the clearance between the main pin and the stick can be adjusted.

Model	Unit	AT306	CAT308	CAT312	CAT320	CAT325	CAT330	CAT336	CAT336	CAT336	CAT345	CAT345	CAT374	CAT395	PC200	PC300	PC300	PC360	PC360	PC400	PC450
Weight	kg	220	300	700	1034	1200	1350	12400	1600	1750	2856	3064	5302	6966	1110	1550	1850	1800	1930	2500	2600
Capacity	m^3	0.2	0.3	0.85	1	1.22	1.2	1.3	1.46	1.62	2.67	2.9	4.7	5.3	1.2	1.3	1.82	1.65	1.9	2.1	2.1

Model	Unit	EC200	EC220	EC300	EC350D	EC380	EC480	EC550	SK200	SK280	SK350	SK390	DX205	DX305	DX380	DX1250	BRT220X BRT370		SY215	SY365	SY500
Weight	kg	1050	1340	1650	1850	2080	3300	3900	950	1385	1750	2120	930	1630	2000	10900	1250	1908	1000	1800	2850
Capacity	m^3	1	1.2	1.5	1.6	1.8	3	3.5	1	1.5	1.8	2	0.92	1.65	2.15	.8	1.25	2.1	1.1	1.6	2.38

* Actual dimensions vary slightly depending on the excavator model.

Skeleton Bucket



Application: Screening soil, gravel and other bulk materials.

Features:
High strength, good wear resistance and long anti-corrosion life; welded firmly and solidly; thickened design with side and wear plates; the main body uses Q355B manganese plate steel; the grid size can be customized.

Model	Unit	CAT302	CAT306	CAT312	CAT320	CAT320	CAT325	CAT336	CAT336	CAT336	CAT345	CAT345
Weight	kg	200	320	700	1084	1226	1300	1850	2018	2142	2960	5500
Capacity	m^3	0.12	0.3	0.6	1	1.25	1.3	1.8	1.9	2	2.7	4.6

* Actual dimensions vary slightly depending on the excavator model.

Standard Bucket



Application: Ordinary soil, crushed stone and gravel.

Features:
High strength, good wear resistance and long anti-corrosion life; welded firmly and solidly; thickened design with side and wear plates; the main body uses Q355B manganese plate steel, NM wear-resistant plate and imported high-strength steel; the main pin uses 42CrMo alloy steel for high strength and good toughness; the clearance between the main pin and the stick can be adjusted.

Model	Unit	EC200	EC220	EC300	EC350D	EC380	EC480	EC550	SK200	SK280	SK350	SK390	DX205	DX305	DX380	BRT220X	BRT370	SY215	SY365	SY500
Weight	kg	950	1250	1500	1750	1850	3050	3500	870	1350	1600	2000	900	1550	1850	1150	1775	900	1650	2500
Capacity	m^3	1	1.2	1.5	1.6	1.8	3	3.5	1	1.5	1.8	2	0.92	1.65	2.15	1.25	2.1	1.1	1.6	2.38

* Actual dimensions vary slightly depending on the excavator model.

Britop 博越达

Clamshell Bucket

Application:

Digging and loading of sandy materials in trenches or on one side of restricted spaces.

Features:

Higher torque and a shaft that resists breakage for more flexible grabbing;

Large-bore cylinders deliver high gripping force, fast material intake and greater safety;

Cylinders and control linkage are built in and protected by the housing, keeping the grab synchronized;

The two buckets use a linked structure for strong synchronization.

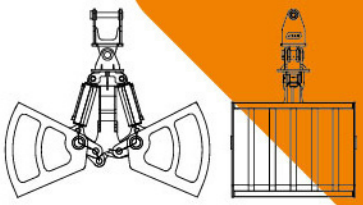



Tilt Bucket

Application:

Digging and grabbing in crushed-stone yards, and handling of various small and medium-sized materials

Features:

Q355B manganese plate steel for high strength and corrosion resistance;

The rotary version uses a Swiss-imported rotary motor;

Honed-tube cylinders with imported HALLITE oil seals give short cycle times and long service life.

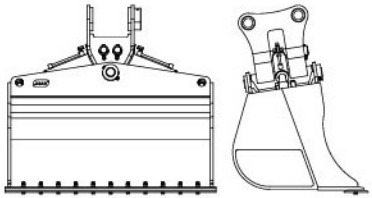



Wide / Narrow Dredging Bucket

Application:

Digging mud, river banks and ditches in special conditions; the large body suits high-capacity flat trimming and desilting.

Features:

High strength, good wear resistance and long corrosion-resistant life; solid welding, thickened design and wear-resistant side plates;

Main body made of Q355B manganese plate steel;

Reversible and replaceable cutting edge doubles utilization.

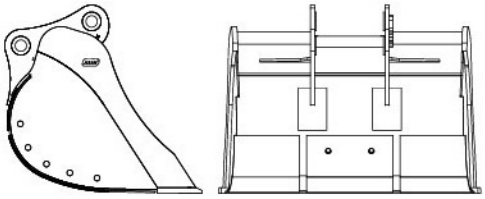



Rake Bucket

Application:

Auxiliary grabbing of materials.

Features:

Q355B manganese plate steel for high strength and corrosion resistance;



Type A

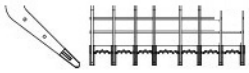

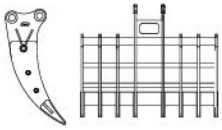



Type B

Britop 博越达

Thumb

Application:

Assists the bucket in gripping and clamping large materials.

Main Features:

Made of Q355B manganese steel plate: high strength, corrosion resistant; Cylinders use honed tubes and imported HALLITE seals: short cycle time, long service life.



Standard

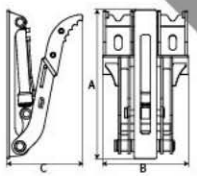



Mechanical

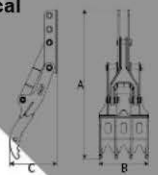



Type B



Item/Mod	Unit	BRTPT02B	BRTPT04	BRTPT04M	BRTPT04B	BRTPT06	BRTPT06M	BRTPT06B	BRTPT08	BRTPT08M	BRTPT08B	BRTPT10	BRTPT10M
Applicable Excavator	ton	3-5	5-9	5-9	5-9	9-16	9-16	9-16	18-26	18-26	18-26	28-35	28-35
Weight	kg	Customized	210	210	Customized	445	445	Customized	580	580	Customized	970	970
Length A	mm	500-800	1110	1110	800-1300	1570	1570	900-1500	1620	1620	1000-2000	1800	1800
Width B	mm	300-600	508	508	400-800	660	660	500-1000	762	762	600-130	1016	1016
Height C	mm	180-300	540	540	200-280	760	760	250-380	860	860	260-400	992	992
Working Pressure	bar	180	180	-	180	250	-	250	280	-	280	300	-
Working Flow	lpm	35-55	50-100	-	50-100	100-110	-	90-110	100-140	-	100-140	130-180	-

*Dimensions vary slightly with bucket data.

Note: M - mechanical linkage type

Bucket Clamp

Application:

Digging and clamping at crushed-stone yards; handling of various small and medium materials.

Main Features:

Made of Q355B manganese steel plate: high strength, corrosion resistant; Rotary version uses a Swiss-imported rotation motor; Cylinders use honed tubes and imported HALLITE seals: short cycle time, long service life.





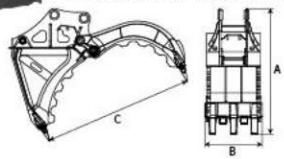

Fixed

Rotating

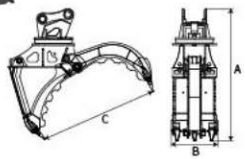

Item/Mo	Unit	BRTCB20	BRTCB40	BRTCB40R	BRTCB80	BRTCB80R	BRTCB150	BRTCB150R	BRTCB200	BRTCB200R	BRTCB300	BRTCB300R
Applicable Excavator	ton	2-3	3-5	3-5	6-9	6-9	12-18	12-18	20-30	20-30	30-40	30-40
Weight	kg	167	350	470	580	690	820	950	1400	1770	1630	1930
Height A	mm	880	1150	1300	1300	1630	1750	2100	2000	2410	2250	2940
Width B	mm	330	430	430	600	600	690	690	850	850	980	980
Opening C	mm	820	1180	1180	1380	1380	1550	1550	2200	2200	2670	2670
Working Pressure	bar	130	140	180	150	180	220	250	250	280	280	280
Working Flow	lpm	40	50	60	80	100	160	160	220	220	220	220
Teeth Width	mm	290	350	350	485	485	560	560	710	710	855	855
Swing Diameter	mm	-	-	360	-	360	-	593	-	752	-	752

Note: R - hydraulic rotary type

Demolition & Sorting Bucket

Application:

Handling or moving of various large and bulk materials.

Main Features:

Made entirely of NM400 steel: high strength, corrosion resistant; imported rotation motor; models 1800 and above use dual motors for higher rotation torque and smaller space; rotation speed is adjustable in one direction with high efficiency; the rotation is fitted with a balance valve so it will not slip during turning; the cylinder circuit has a double-acting safety valve to maintain clamping force for high safety;



Type A

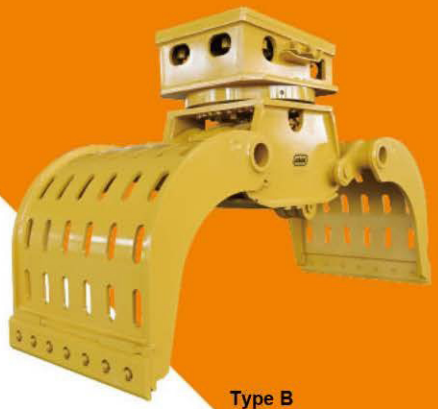

Type B

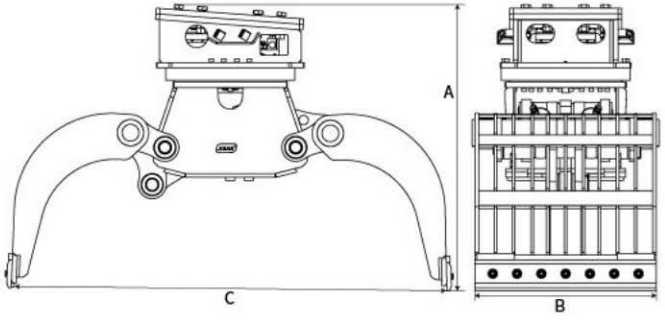

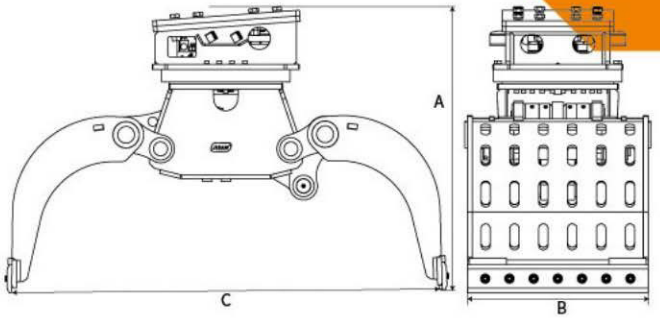

Item/Mod	Unit	BRT SG1400	BRT SG1800	BRT SG2200	BRT SG2300	BRT SG1400B	BRT SSG1800B	BRT SG2200B	BRT SG2300B
Applicable Excavator	ton	5-9	9-16	18-26	28-35	5-9	9-16	18-26	28-35
Weight	kg	530	1130	1880	2410	530	1130	1880	2410
Height A	mm	1370	1517	1830	2470	1370	1517	1830	2470
Width B	mm	620	870	1000	1380	620	870	1000	1380
Opening C	mm	1400	1800	2250	2300	1400	1800	2250	2300
Working Pressure	bar	200-240	220-260	240-280	240-280	200-240	220-260	240-280	240-280
Working Flow	lpm	100	160	200-250	200-250	100	160	200-250	200-250
Swing Diameter	mm	360	593	690	690	360	593	690	690

Lifting Magnet

Application:

Application: sorting, loading/unloading, transfer and stacking of various large and bulk ferrous materials (iron blocks, rebar, steel plates, etc.).

Main Features:

Hydraulic-generator drive technology connects directly to excavator hydraulic systems to generate power. Simple operation, stable power output, suitable for gripping ferrous materials in various working conditions; the core structure is made of high-quality Q345 manganese steel plate: strong, impact resistant and not easily deformed; highly corrosion resistant, maintaining stable performance in complex environments with a long service life.



Electromagnetic

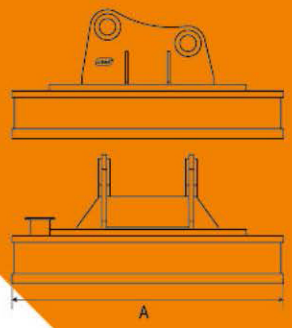



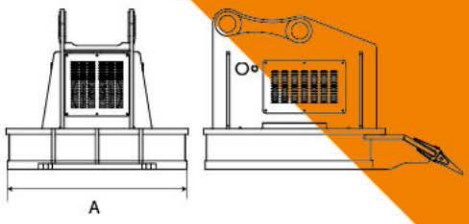



Hydraulic

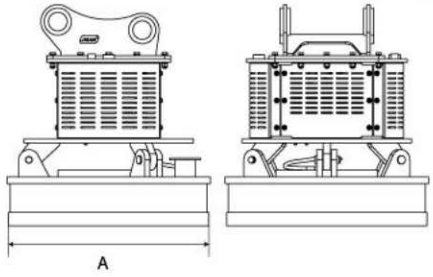

Item/Mod	Unit	Electromagnetic					Hydraulic							
		BRTEL1000	BRTEL1200	BRTEL1300	BRTEL1500	BRTEL1650	BRTSML800	BRTML800T	BRTML1000	BRTML1000T	BRTML1200	BRTML1200T	BRTML1300	BRTML1300T
Applicable Excavator	ton	12-16	18-22	23-26	28-32	32-40	12-16	12-16	18-24	18-24	26-30	26-30	30-40	30-40
Weight	kg	1000	1820	2190	2990	3400	870	920	1330	1460	2080	2170	2490	2590
Power	kW	7	10	11.9	15.6	16.5	3.9	3.9	7	7	10	10	11.9	11.9
Diameter A	mm	1000	1200	1300	1500	1650	800	800	1000	1000	1200	1200	1300	1300
Working Pressure	bar	-	-	-	-	-	190	190	210	210	210	210	250	250
Working Flow	lpm	-	-	-	-	-	90-110	90-110	120-160	120-160	130-170	130-170	160-200	160-200

Note: T - with added teeth

Compactor



Standard



Side-standing

Application:

Compaction, pile driving/extraction and breaking on trenches, slopes, steps and complex terrain.

Main Features:

Made of Q355B manganese steel plate: high strength, corrosion resistant; Imported high-speed vibration motor: sturdy and durable; German-imported FAG bearings: low noise, safe and reliable; Reinforced base plate for extra durability.

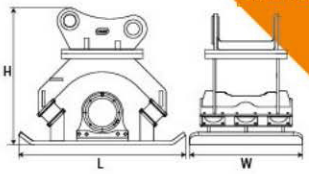

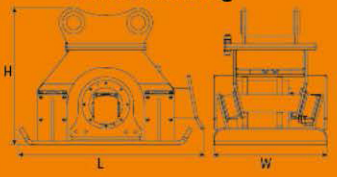

Item/Mod	Unit	BRTC02	BRTC02-A	BRTC04	BRTC04-A	BRTC06	BRTC06-A	BRTC08	BRTC08-A	BRTC10	BRTC10-A
Applicable Excavator	ton	3-5	3-5	6-9	6-9	9-16	9-16	18-26	18-26	26-35	26-35
Impact Force	ton	3	3	6	6	15	15	20	20	20	20
Max. Vibration Frequency	r/min	2300	2300	2300	2300	2300	2300	2300	2300	2300	2300
Working Pressure	bar	200-220	200-220	200-220	200-220	200-220	200-220	200-220	200-220	200-220	200-220
Working Flow	lpm	70	70	70	70	140	140	200	200	200	200
Weight	kg	200	240	325	360	560	640	900	1000	950	1050
Impact Area L×W	mm	660*470	660*470	900*550	800*550	1150*700	910*700	1080*885	1080*885	1080*885	1080*885
Height H	mm	620	625	676	700	845	850	1060	935	1100	935

Note: A - side-standing type

Compaction Wheel

Application:

Compaction of road surfaces and base layers of soil, asphalt concrete, various fill materials and clay-rich materials; trench and pipeline works, backfill and foundation construction, slope compaction; good results when compacting cohesive soil fills with higher moisture content and varied particle sizes; compaction of clay, gravel and cohesive soils.

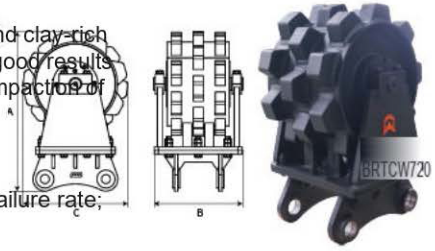

Main Features:

Rational design, simple and sturdy structure, long service life; sealed lubrication design is maintenance-free and suits harsh working conditions; Simple installation, easy to use, low failure rate; handles demanding compaction jobs; Effectively compacts various soil layers, gravel and crushed-stone fills.

Item/Mod	Unit	BRTCW520	BRTCW620	BRTCW720	BRTCW820
Applicable Excavator	ton	6-9	9-16	18-26	26-35
Weight	kg	305	485	720	1150
Height A	mm	797	930	1075	1240
Width B	mm	450	512	610	710
Length C	mm	520	620	720	820

GET IN TOUCH

Thank You

Thank you for taking the time to explore the BRITOP attachment range. From the first enquiry to after-sales service, our team works with you to specify, supply and support the right attachment for your machine.

Every enquiry is answered within one working day (GMT+8).

HEAD OFFICE

1505, Unit 2, Building 1, No. 136
Zhuhai East Road, Huangdao District
Qingdao 266400, Shandong, China

TEL

+86 138 1145 8455
+86 153 6990 8455

WEBSITE

www.qdbritop.com

EMAIL

info@qdbritop.com (general enquiry)
sales@qdbritop.com (sales)
support@qdbritop.com (technical support)
supplier@qdbritop.com (suppliers & partners)

WORKING HOURS

Monday–Saturday, 9:00–18:00 (GMT+8)